MATERIAL – ALUMINUM.
MICROMETER ADJUSTMENTS.
MOVEMENTS SPRING LOADED AGAINST MICROMETER SPINDLES.
LENS HOLDER WILL FIT ON MODELS A, B, C, D, E, F, J

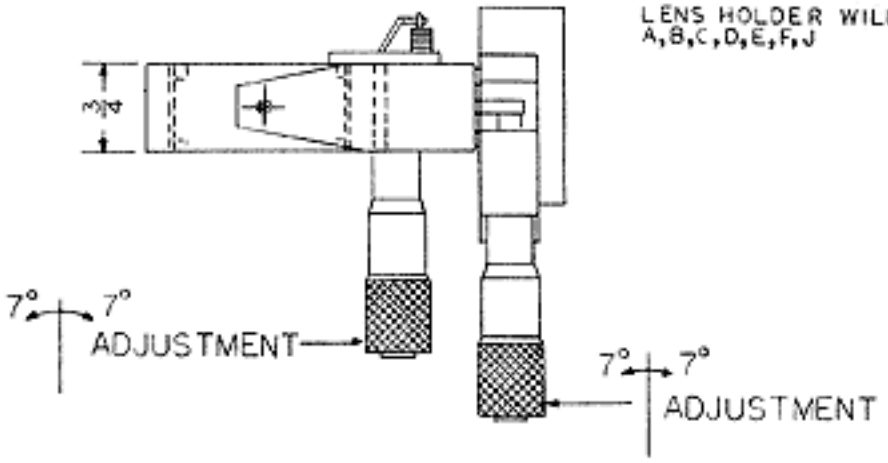

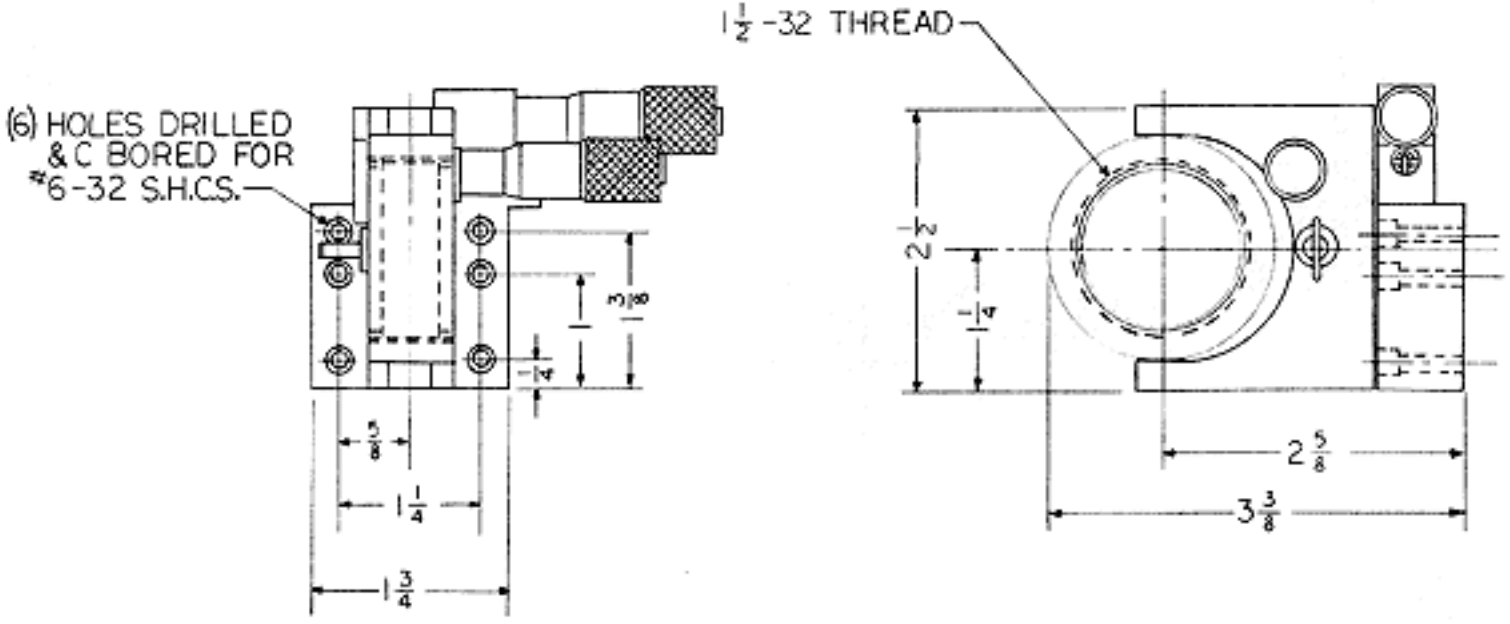

LENS HOLDER

LINE TOOL CO.
943 KURTZ ST.
ALLENTOWN, PA.